Name of the teacher— Mrs. Monika Sharma

Department of Physics and Electronics

Name of the course— B.Sc. (H) Physics

Semester- IV

Name of the paper—Electrical circuits and Network Skills

Paper code-32223903

Lecture Time-- Saturday (10:40 to 12:40)

Generators: Working, types and advantages

Principle of generator:

Generator is a machine that converts mechanical energy into electrical energy. It works based on principle of faraday law of electromagnetic induction. The faradays law states that whenever a conductor is placed in a varying magnetic field, EMF is induced and this induced EMF is equal to the rate of change of flux linkages. This EMF can be generated when there is either relative space or relative time variation between the conductor and magnetic field. So the important elements of a generator are:

- Magnetic field
- Motion of conductor in magnetic field

Construction of generator:

In the fig., single-turn rectangular copper coil ABCD is rotating about its own axis in a magnetic field provided by either permanent magnet or electromagnets. The two ends of the coil are joined to two slip rings 'a' and 'b' which are insulated from each other and from the central shaft. Two collecting brushes (made of either carbon or copper) are pressed against the slip rings. Their function is to collect the current induced in the coil and convey to the external load resistance R.

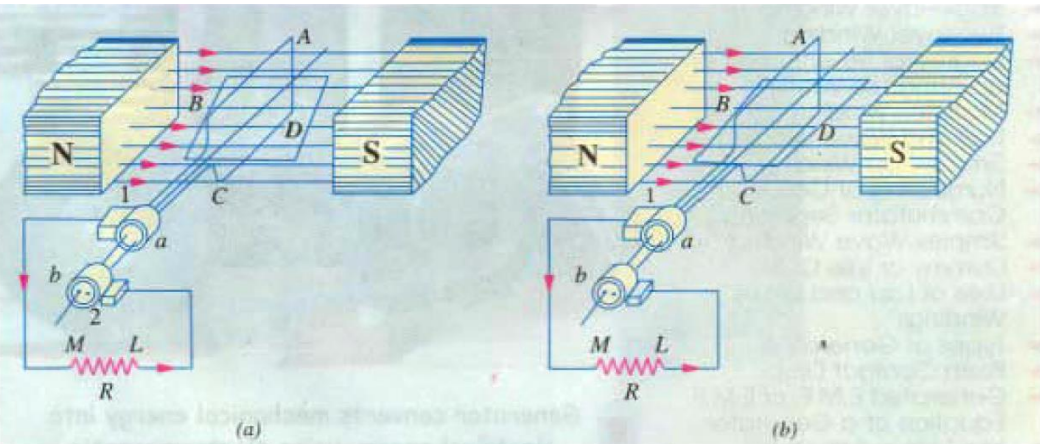

The rotating coil may be named as armature and the magnets are called as field magnets.

Working of Generators:

Parts of a practical generator:

1. Magnetic frame or yoke

2. Pole-Cores and Pole-shoes

3. Pole coils or field coils

4. Armature core

5. Armature windings or conductors

6. Commutators

7. Brushes and bearings

Generators are basically coils of electric conductors, normally copper wire, that are tightly wound onto a metal core and are mounted to turn around inside an exhibit of large magnets. An electric conductor moves through a magnetic field, the magnetism will interface with the electrons in the conductor to induce a flow of electrical current inside it.

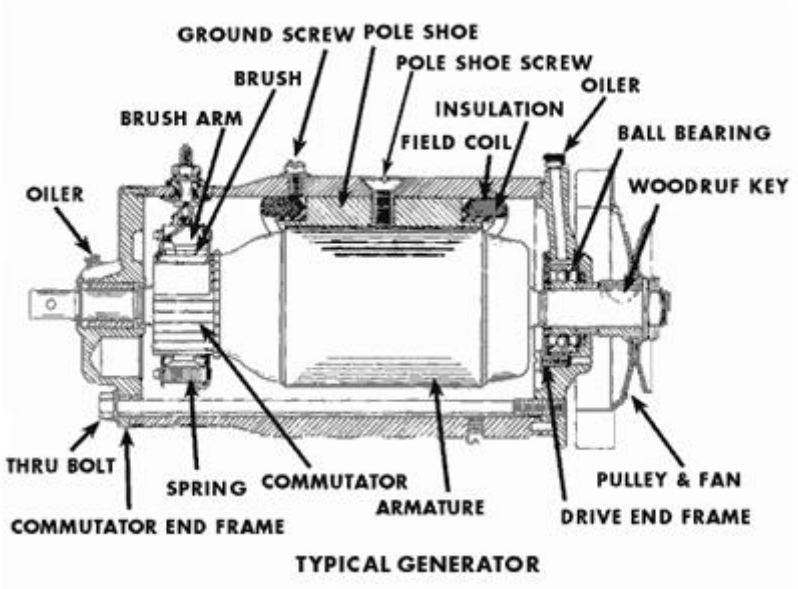

TYPICAL GENERATOR

The conductor coil and its core are called the armature, connecting the armature to the shaft of a mechanical power source, for example an motor, the copper conductor can turn at exceptionally increased speed over the magnetic field.

The point when the generator armature first starts to turn, then there is a weak magnetic field in the iron pole shoes. As the armature turns, it starts to raise voltage. Some of this voltage is making on the field windings through the generator regulator. This impressed voltage builds up stronger winding current, raises the strength of the magnetic field. The expanded field produces more voltage in the armature. This, in turn, make more current in the field windings, with a resultant higher armature voltage. At this time the signs of the shoes

depended on the direction of flow of current in the field winding. The opposite signs will give current to flow in wrong direction.

Types of Generators:

The generators are classified into types.

- AC generators
- DC generators

AC Generators:

These are also called as alternators. It is the most important means of producing electrical power in many of the places since now days all the consumers are using AC. It works based on principle of the electromagnetic induction. These are of two types one is induction generator and other one is synchronous generator. The induction generator requires no separate DC excitation, regulator controls, frequency control or governor. This concept takes place when conductor coils turn in a magnetic field actuating a current and a voltage. The generators should run at a consistent speed to convey a stable AC voltage, even no load is accessible.

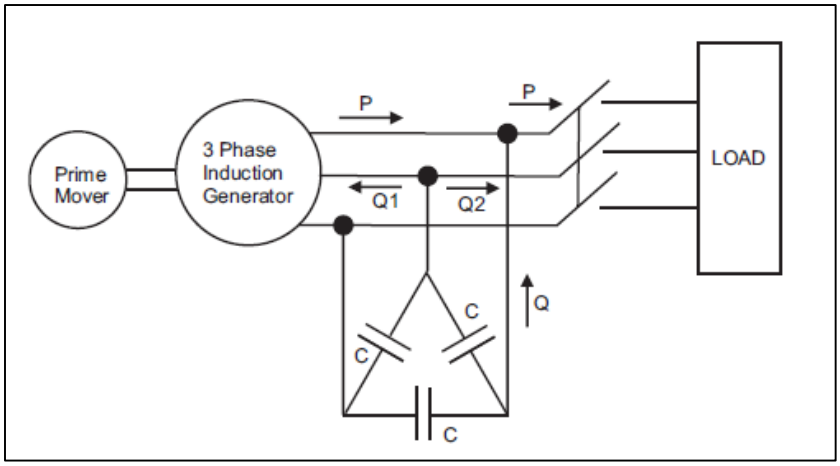

Figure: Induction Generator

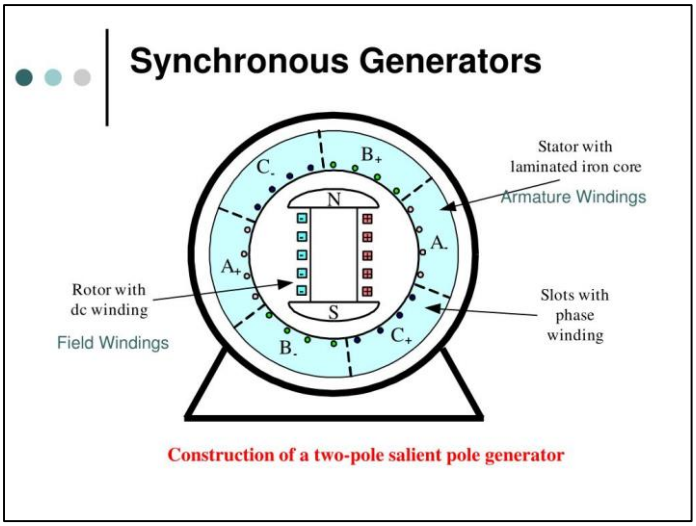

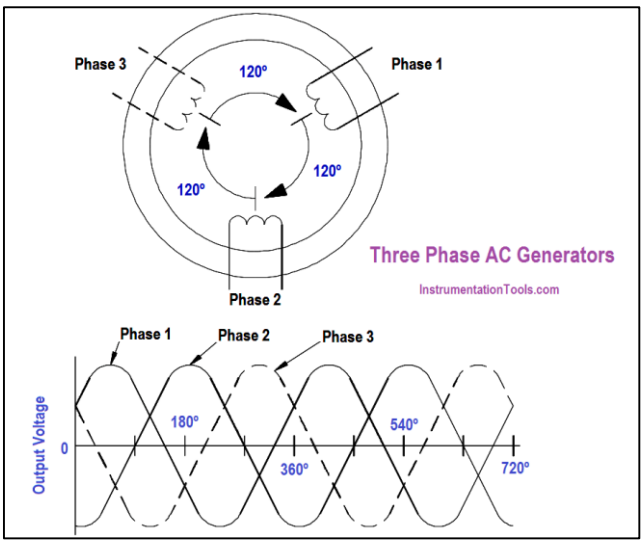

Figure: 3 phase ac generator

Synchronous generators are large size generators mainly used in power plants. These may be rotating field type or rotating armature type. In rotating armature type, armature is at rotor and field is at stator. Rotor armature current is taken through slip rings and brushes. These are limited due to high wind losses. These are used for low power output applications. Rotating field type of alternator is widely used because of high power generation capability and absence of slip rings and brushes.

It can be either 3 phase or two phase generators. A two-phase alternator produces two completely separate voltages. Each voltage may be considered as a single-phase voltage. Each is generated voltage completely independent of the other. The three-phase alternator has three single-phase windings spaced such that the voltage induced in any one phase is displaced by 120º from the other two. These can be connected either delta or wye connections. In Delta Connection each coil end is connected together to form a closed loop. A Delta Connection appears like the Greek Letter Delta (Δ). In Wye Connection one end of each coil connected together and the other end of each coil left open for external connections. A Wye Connection appears as the letter Y. These generators are packaged with an engine or turbine to be used as a motor-generator set and used in applications like naval, oil and gas extraction, mining machinery, wind power plants etc

Advantages of AC Generator:

- These Generators are generally maintenance free, because of absence of brushes.
- Easily step up and step down through transformers.
- Transmission link size might be thinner because of step up feature
- Size of the generator relatively smaller than DC machine
- Losses are relatively less than DC machine
- These Generator breakers are relatively smaller than DC breakers

DC Generators:

DC generator is typically found in off-grid applications. These generators give a seamless power supply directly into electric storage devices and DC power grids without novel equipment. The stored power is carries to loads through dc-ac converters. The DC generators could be controlled back to an unmoving speed as batteries tend to be stimulating to recover considerably more fuel.

Classification of DC Generators

D.C Generators are classified according to the way their magnetic field is developed in the stator of the machine.

- Permanent-magnet DC generators
- Separately-excite DC generators and
- Self-excited DC generators.

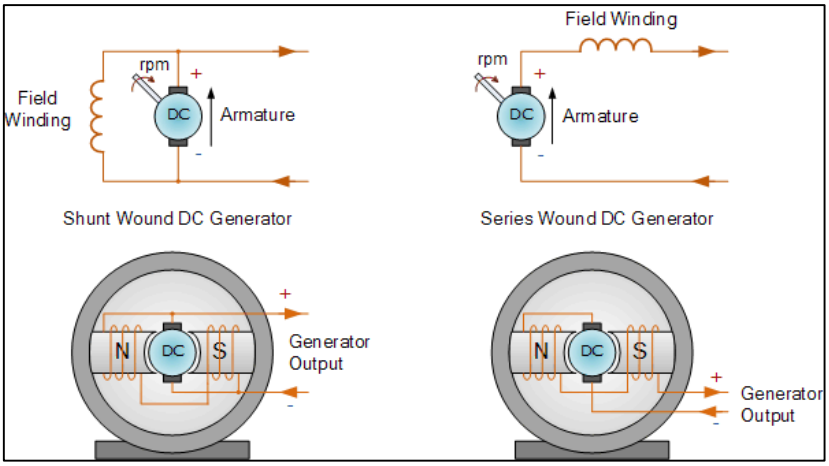

Figure: Permanent magnet DC generator

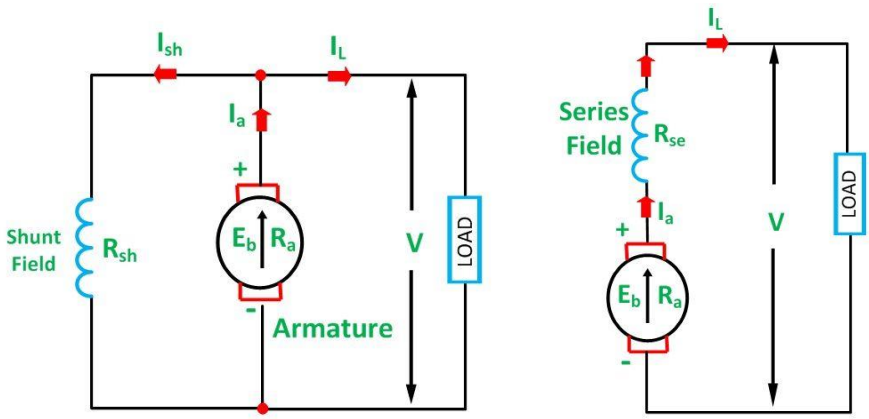

Self-excited- Shunt and series wound DC generator.

Permanent magnet DC generators do not require external field excitation because it has permanent magnets to produce the flux. These are used for low power applications like

dynamos. Separately-excite DC generators requires external field excitation to produce the magnetic flux. We can also vary the excitation to get variable output power. These are used in electro plating and electro refining applications. Due to residual magnetism present in the poles of the stator self-excited DC generators can able to produce their own magnetic field ones it is started.

The self-excited DC Generators are further classified as **Shunt wound** DC generators; **Series wound** DC generators and **Compound wound** DC generators. The Compound Wound DC generators are further divided as long shunt wound DC generators, and short shunt wound DC generators.

The field pole of the DC generator are stationary, and the armature conductor rotates. The voltage generated in the armature conductor is of alternating nature, and this voltage is converted into the direct voltage at the brushes with the help of the commutator.

These are simple in design and no need to have the external circuit to vary the field excitation. Again these self-excited DC generators are classified into shunt, series, and compound generators.

These are used in applications like battery charging, welding, ordinary lightening applications etc.

Advantages of DC Generator:

- Mainly DC machines have the wide variety of operating characteristics which can be obtained by selection of the method of excitation of the field windings.
- The output voltage can be smoothed by regularly arranging the coils around the armature .This leads to less fluctuations which is desirable for some steady state applications.
- No shielding need for radiation, so cable cost will be less as compared to AC.

What are the differences between AC and DC Generator?

Sl. No.	Differentiating Property	AC Generator	DC Generator
1	**Definition**	AC generator is a mechanical device which converts mechanical energy into AC electrical power.	DC generator is a mechanical device which converts mechanical energy into DC electrical power.
2	**Direction of Current**	In an AC generator, the electrical current reverses direction periodically.	In a DC generator, the electrical current flows only in one direction.

3	**Basic Design**	In an AC generator, the coil through which the current flows is fixed while the magnet moves. The construction is simple and costs are less.	In a DC generator, the coil through which the current flows rotates in a fixed field. The overall design is very simple but construction is complex due to commutators and slip rings.
4	**Commutators (an electrical switch changing the direction of field current).**	AC generator does not have commutators.	DC generators have commutators to make the current flow in one direction only.
5	**Rings (electrical connections used to transfer to and from the generator)**	AC generators have slip-rings.	DC generators have split-ring commutators.
6	**Efficiency of Brushes (conducts current between stationary wires and moving parts in the generator)**	Since slip-rings have a smooth and uninterrupted surface, they do not wear quickly and are highly efficient.	Both brushes and commutators of a DC generator wear out quickly and thus are less efficient.
7	**Short Circuit Possibility**	As the brushes have high efficiency, a short circuit is very unlikely.	Since the brushes and commutators wear out quickly, sparking and short circuit possibility is high.
8	**Armature (generates flow of electricity when induced in the magnetic field)**	In the case of AC generators, the armature is always the rotor.	In the case of DC generators, the armature may be either rotor or stator.
9	**Rotating Parts**	The rotating part in an AC Generator is low current high resistivity rotor.	The rotating part in a DC generator is generally heavy.
10	**Current Induction**	In an AC generator, the output current can be either induced in the stator or in the rotor.	In a DC generator, the output current can only be induced in the rotor.
11	**Output Voltage**	AC generators produce a high voltage which varies in amplitude and time. The output frequency varies (mostly 50Hz to 60Hz).	DC generators produce a low voltage when compared to AC generator which is constant in amplitude and time i.e. output frequency is zero.
12	**Maintenance**	AC generators require very less maintenance and are highly reliable.	DC generators require frequent maintenance and are less reliable.

13	**Types**	AC generators can of varying types like 3 Phase generators, Single phase generators, synchronous generator, induction generator, etc.	DC generators are mainly two types which are Separately excited DC generator and Self-excited DC generator. According to field and armature connection, they can be further classified as DC series, shunt or compound generators respectively.
14	**Cost**	The initial cost of an AC generator is high.	The initial cost of a DC generator is less when compared to AC generators.
15	**Distribution and Transmission**	The output from AC generators is easy to distribute using a transformer.	The output from DC generators is difficult to distribute as transformers cannot be used.
16	**Efficiency**	AC generators are very efficient as the energy losses are less.	DC generators are less efficient due to sparking and other losses like copper, eddy current, mechanical and hysteresis losses.
17	**Applications**	It is used to power for smaller motors and electrical appliances at homes (mixers, vacuum cleaners, etc.)	DC generators power very large electric motors like those needed for subway systems.